H310I-IM-A R2.0

Mini-ITX, LGA1151 socket for the 8th Gen CPU, H310 chipset, 2xSO-DIMM.
1xPCIe x16, 2*DP, HDMI, LVDS, 2xM.2 slot, 1xMini-PCIe

Features

- Two 260-pin SO-DIMM up to 32GB DDR4 2400/2133 MHz SDRAM.
- Supports Dual display configuration by multiple interface: 2*DP/HDMI/LVDS
- 7-year longevity supply
- Wide temperature range endurance: 0~60°C

Specifications

CPU	LGA1151 socket for the 8th Generation Intel® Core™ i7/ i5/ i3/ Pentium® / Celeron® processors supports 14nm CPU. *CPU only support up to 65W
Chipset	Intel® H310 chipset
Memory	2 x SO-DIMM, max.32GB, DDR4 2666*/2400/2133 MHz, non-ECC, un-buffered memory *DDR4 2666MHz and higher memory modules will run at max. 2666MHz on Intel® 8th Gen. 6-core or higher processors.
Expansion Slots	1 x M.2 Socket 1 with E key, type 2230 for WIFI/BT device 1 x M.2 Socket 3 with M key, type 2242/2260/2280(PCIe & SATA mode) 1 x PCIe x16 slot 1 x MiniPCIe, full/half mini-PCIe with SATA
Display	Multi-VGA output support :2*DP/HDMI/LVDS* *Supports up to 2 displays simultaneous
USB	4 x USB 3.1 gen1 connectors (@back IO) 1 x USB 3.1 Gen1 header support additional 2 x USB 3.1 gen1 ports @mid-board) 2 x USB 2.0 headers support additional 4 x USB 2.0 connectors (@mid-board)
Serial Port	2 x COM connectors(RS232/422/485) 4 x COM header(RS232)
Internet	2 x RJ45 connectors(1 x Intel® I219V, 1 x Intel® I211AT)
Audio	2 x Audio jack Realtek ALC887-VD2 High Definition Audio CODEC
Internal I/O	2 x SATA 6Gb/s connectors 1 x CPU fan connector 1 x Chassis fan connector 1 x Front panel audio connector (AAFP) 1 x System panel connector 1 x Clear CMOS header 1 x Speaker connector 1 x 24-pin ATX power connector 1 x 4-pin ATX power connector 1 x AT/ATX select header
Digital I/O	1 x 8bit GPIO header
TPM	1 x TPM header
BIOS	128 Mb Flash ROM, UEFI AMI BIOS
Watch dog timer	Yes
Power requirement	AT/ATX mode
Operation Temperature	0~60℃
Non-Operation Temperature	-40~85℃
Relative Humidity	0%~85%
Operating System Support	Windows® 10 (64-bit)
Form Factor	Mini-ITX form factor, 6.7” x 6.7” (17.0cm x 17.0cm)

The specifications and price are subject to change without prior notice 2018 ASUSTek Computer Inc. All rights reserved.

Block Diagram

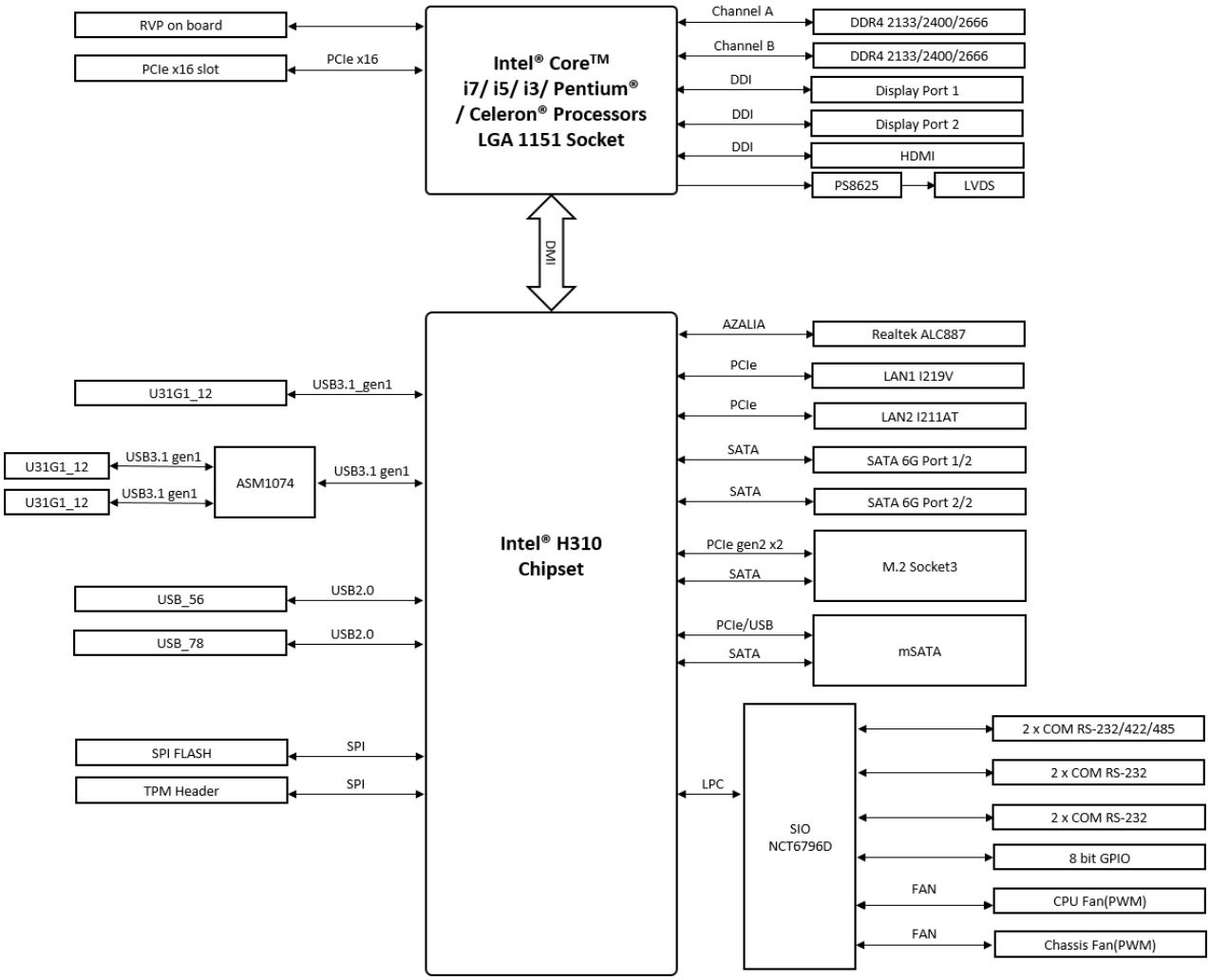

Ordering Information

Model Name	Description
H310I-IM-A R2.0	Mini-ITX Embedded Board with 6th/7th generation Intel® Core™ i7/i5/i3 Desktop Processor with H310 Chipset, **2*DP+1*HDMI+LVDS**
H310I-IM-A R2.0 (option 1)* *Produced by request.	Mini-ITX Embedded Board with 6th/7th generation Intel® Core™ i7/i5/i3 Desktop Processor with H310 Chipset, **1*DP+1*HDMI+1*VGA+1*LVDS**
H310I-IM-A R2.0 (option 2)* *Produced by request.	Mini-ITX Embedded Board with 6th/7th generation Intel® Core™ i7/i5/i3 Desktop Processor with H310 Chipset, **2*DP+1*HDMI+1*eDP**
H310I-IM-AR2.0 (option 3)* *Produced by request.	Mini-ITX Embedded Board with 6th/7th generation Intel® Core™ i7/i5/i3 Desktop Processor with H310 Chipset, **1*DP+1*HDMI+1*VGA+1*eDP**

Packing List

Accessory List
2 * SATA Cable
1 * User Manual
1 * Rear I/O Shield

Optional Accessories

Part Number	Description
90MC04G0-M0UBY0	ASUS COM.2 Card
90MC07D0-M0XBN0	TPM Card-SPI
90MC03S0-B0XCN0	RS232 Serial Cable

The specifications and price are subject to change without prior notice 2018 ASUSTek Computer Inc. All rights reserved.